HabaCHAIN ®
Snap-on 2873SD (Radius)

Stiles Enterprises

Your Source For Habasit Belting And Chain

www.StilesEnterprises.com • 1-800-325-4232

Description

Snap-on 2873SD is a tabbed heavy duty radius and straight running side drive snap-on chain. It is a two piece system that has a metallic 3/4" pitch 1873 roller chain with snap-on plastic top plates that can be driven from the side designed for bi-directional travel. Top plate thickness 4.0 mm. Applications include long conveyor runs, found in institution/cafeteria dishwashing lines.

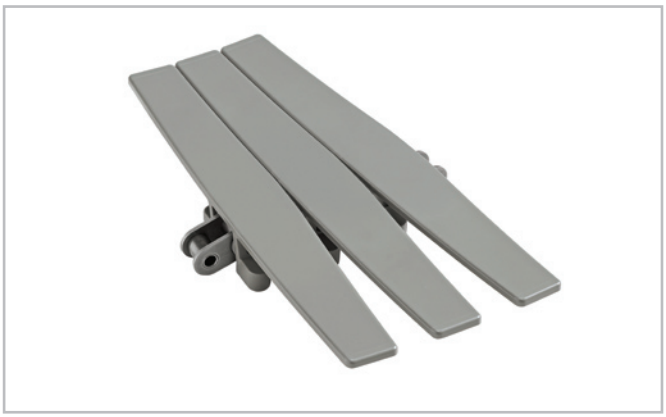

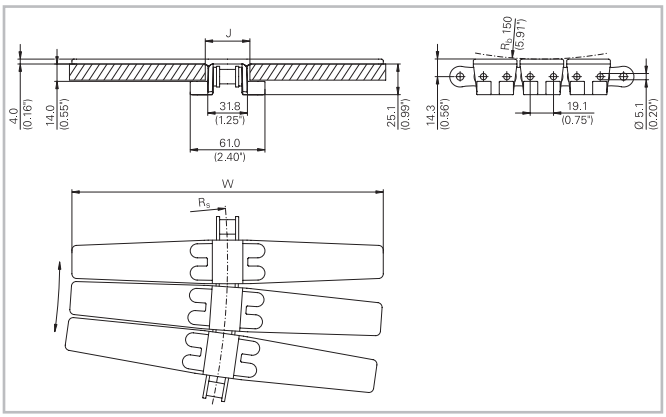

Chain Data

Habasit code	Width W		Weight		Nominal tensile strength F N		J (straight)		J (curve)		R_s		Material
	mm	inch	kg/m	lb/ft	N	lbf	mm	inch	mm	inch	mm	inch	
C2873S1000DPTA	254.0	10.00	3.47	2.33	4000	900	33.3	1.31	35.1	1.38	457	18.0	DP
C2873S1000LFTA	254.0	10.00	3.47	2.33	4000	900	33.3	1.31	35.1	1.38	457	18.0	LF

Base chain:

- Standard material is CS
- Stainless steel (suffix + SS) on request: Max. workload 2000 N (450 lbf)
- Nomenclature for base chain only:
  -C1873B0075CS
  -C1873B0075SS

- Standard packaging: 3.048 m = 10ft (including one connecting link)
- The weight specification is indicative
- Other top plate material available on request
- Driven by standard #60 series roller chain sprockets

For further information and availability please contact your local Habasit partner.

Product liability, application considerations
If the proper selection and application of Habasit products are not recommended by an authorized Habasit sales specialist, the selection and application of Habasit products, including the related area of product safety, are the responsibility of the customer.
All indications / information are recommendations and believed to be reliable, but no representations, guarantees, or warranties of any kind are made as to their accuracy or suitability for particular applications. The data provided herein are based on laboratory work with small-scale test equipment, running at standard conditions, and do not necessarily match product performance in industrial use. New knowledge and experiences can lead to modifications and changes within a short time without prior notice.
BECAUSE CONDITIONS OF USE ARE OUTSIDE OF HABASIT'S AND ITS AFFILIATED COMPANIES CONTROL, WE CANNOT ASSUME ANY LIABILITY CONCERNING THE SUITABILITY AND PROCESS ABILITY OF THE PRODUCTS MENTIONED HEREIN. THIS ALSO APPLIES TO PROCESS RESULTS / OUTPUT / MANUFACTURING GOODS AS WELL AS TO POSSIBLE DEFECTS, DAMAGES, CONSEQUENTIAL DAMAGES, AND FURTHER-REACHING CONSEQUENCES.